JOB NAME _____
ARCHITECT _____
ENGINEER _____
CONTRACTOR _____
LOCATION _____

SUBMITTALSHEET

Form Number DS3402.5 Effective Date 4/14
Replaces FORM 3402.4

KRUEGER
Excellence in Air Distribution

PLQ Architectural Ceiling Diffuser

24x24 PANEL WITH ROUND NECK

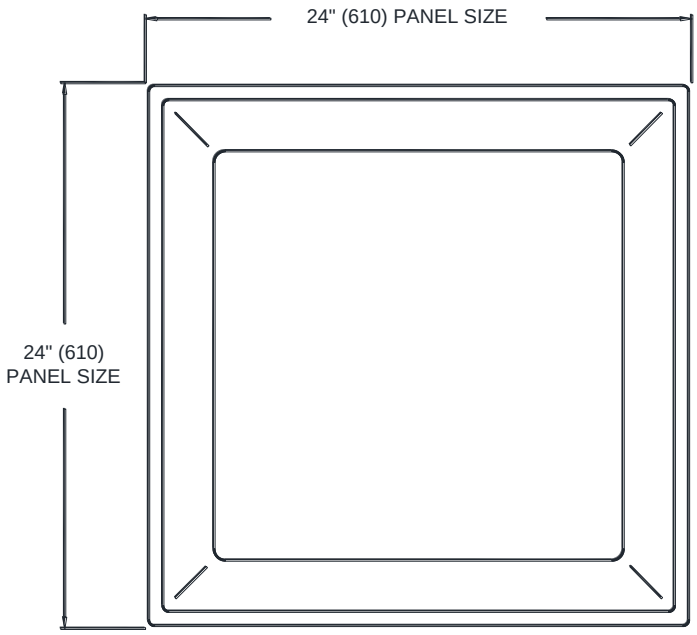

FACE VIEW

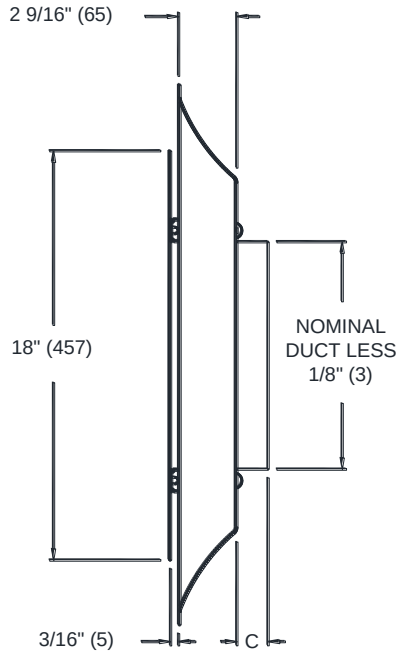

SIDE VIEW

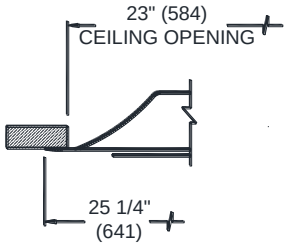

❑ **FRAME 22**
SURFACE MOUNT

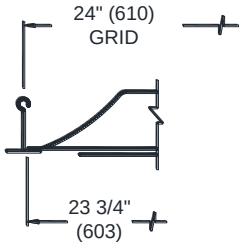

❑ **FRAME 23**
LAY-IN T-BAR

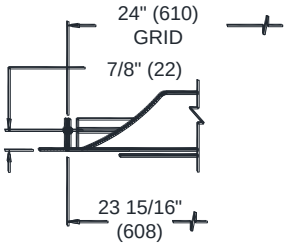

❑ **FRAME 24**
SNAP-IN

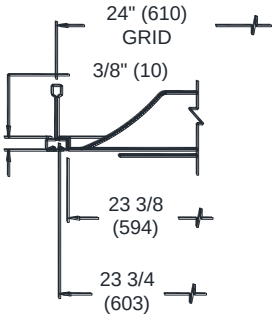

❑ **FRAME 98**
NARROW-TEE

DIMENSIONS ARE SHOWN AS INCHES (MM).

NOTES:
1. UNIT CONSTRUCTION IS 22 GA. BACK PAN WITH A 16 GA. FACE PLAQUE.
2. STANDARD FINISH IS BRITISH WHITE.
3. SEE **FORM 3403.1** FOR PATTERN BLANK OFF DETAILS.
4. WHEN USING FLEX DUCT WITH HARD CEILING PLEASE ORDER F23 WITH CORRESPONDING (5)HCF23 PLASTER FRAME.

	NOMINAL DUCT SIZES					
	6 (152)	8 (203)	10 (254)	12 (305)	14 (356)	15 (381)
C	1 1/8 (29)	1 1/4 (32)	1 3/8 (35)	1 3/8 (35)	1 3/8 (35)	1 3/8 (35)